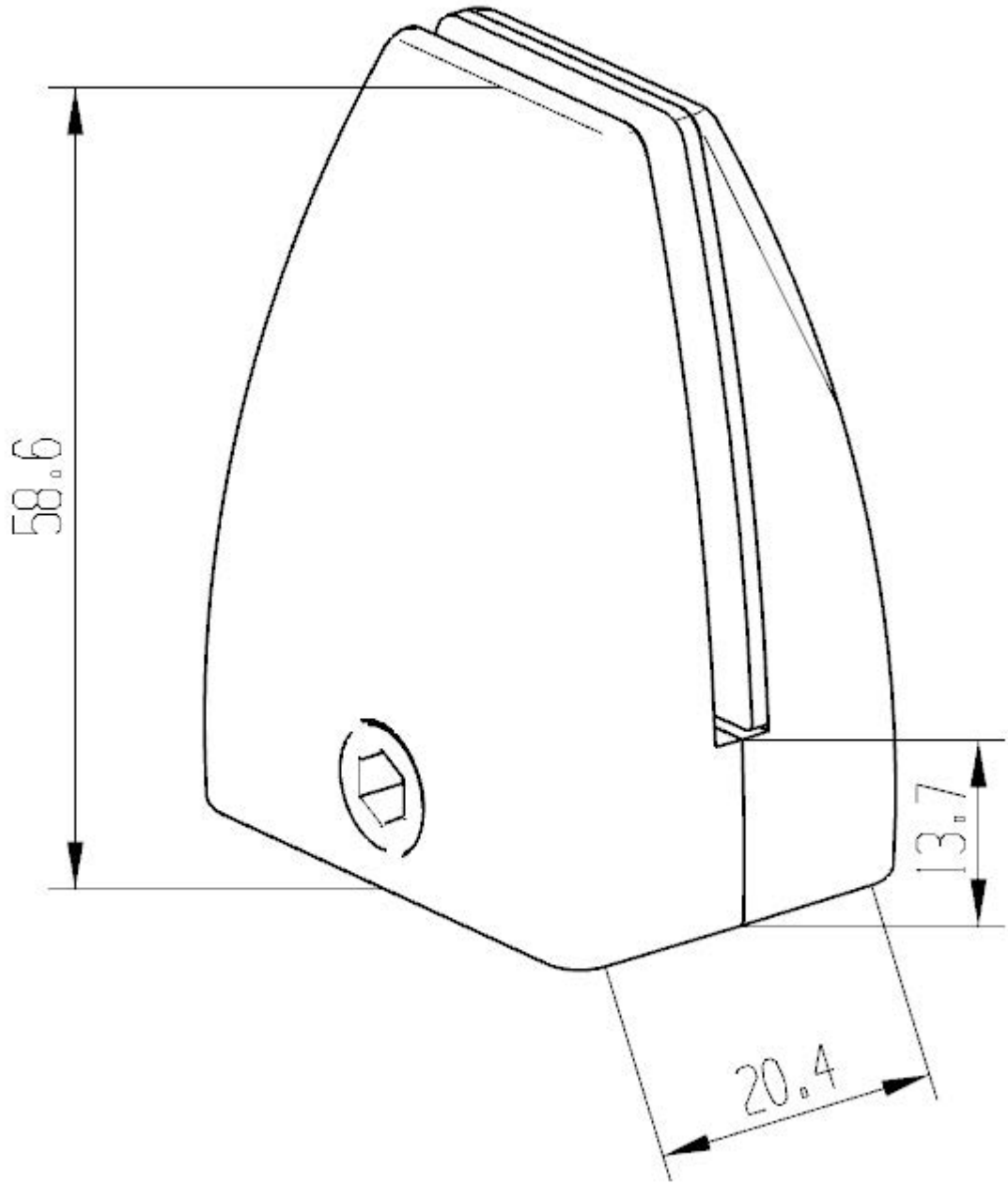
58.6
13.7
20.4