INNOVATION ERGONOMIC MONITOR ARM COLLECTION.



omni

ABOUT US.





Omni (Jiangsu Omni Industrial Co., Ltd.) has been a leading manufacturer in the office furniture industry since 2004. Our extensive product portfolio includes seating, desks and workstations, tables, panel-based/non-panel-based systems, storage, office accessories, power solutions, and interactive conferencing solutions.

Our standout strength lies in our ability to create integrated workspace solutions that incorporate power solutions where needed, recognizing the increasing reliance on technology in today's digital age. We understand the importance of easy access to power and connectivity, which is why our innovative workspace solutions ensure that individuals can stay charged and connected, whether they are working in an office, at home, or in a third place.

OEM/ODM

We offer highly customizable ODM (Original Design Manufacturing) and OEM (Original Equipment Manufacturing) services to meet the unique needs of our clients.

Our professional teams collaborate with clients to co-develop and customize products.

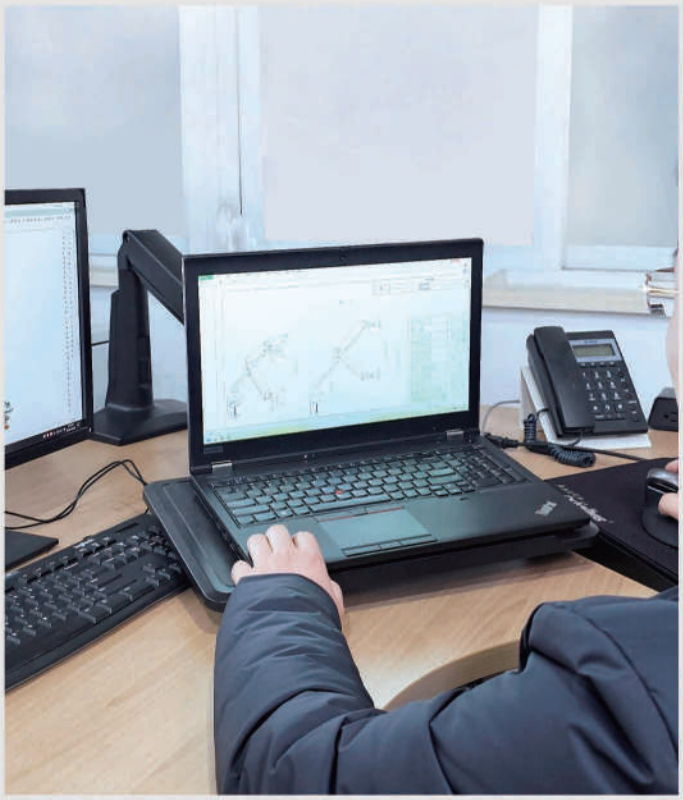



OUR ENGINEER TEAM

Behind our success is a team of experienced professionals who are passionate about creating superior ergonomic designs. Our engineers have many years of experience in the field and work tirelessly to design,develop and deliver ergonomic products.

Cutting-Edge Manufacturing Machinery and Superior Product Quality.

QUALITY CONTROL AND INSPECTION

We implement stringent quality control and inspection procedures throughout the entire production process to ensure that our products meet high-quality standards. This includes raw material inspection, production process monitoring, and final product quality verification.

Hi.Koni





MNA-FS-100

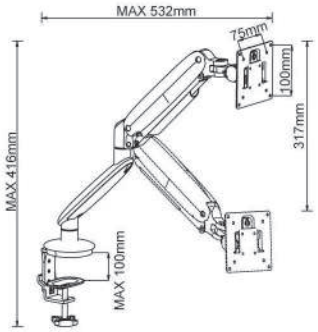

Screen Size	10-30"
Weight Capacity(Per Arm)	2-11kg
Arm MAX Extension	532mm(20.9")
Arm MAX Height	416mm(15.2")
Cable Management	Yes
VESA Compatible	75/100mm
Material	Aluminum
Tilt	-90°/+35°
Swivel	360°
Rotation	360°
Height Adjustable	Gas spring
Clamp Range	0-100mm(0-3.9")
Warranty	2 years



MNA-AT-300

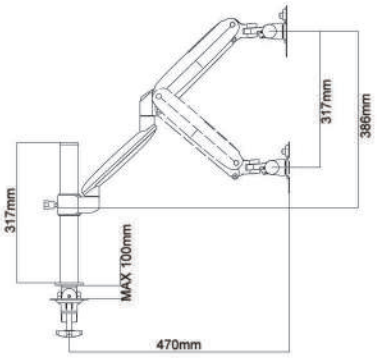

Screen Size	10-30"
Weight Capacity(Per Arm)	2-11kg
Arm MAX Extension	470mm(18.5")
Arm MAX Height	634mm(24.9")
Cable Management	Yes
VESA Compatible	75/100mm
Material	Aluminum
Tilt	-90°/+35°
Swivel	360°
Rotation	360°
Height Adjustable	Gas spring
Clamp Range	0-100mm(0-3.9")
Warranty	2 years

Installation Option



Side Clamp



Grommet Clamp



Grommet Install

SGS

No.: AJHL2211004953FT



MNA-FS-100



MNA-AT-300

Single



MNA-FS-100D

Dual



MNA-AT-300D



MNA-FS-100DB.XX
Offer power station 65w

With Power Socket

X.Hawk





OM80

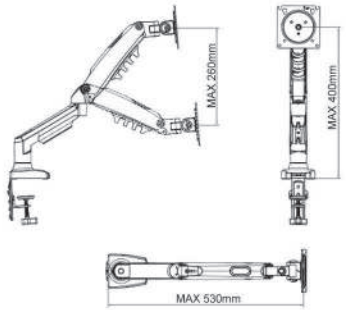

Screen Size	17- 30 inch
Weight Capacity	2-9kg
Tilt	+85°/-30°
Swivel	±90°
VESA	75/100mm
Rotation	360°
Box Dims	410×167×98mm
Weight	3kg
Master Carton	423×342×303mm
Weight	18kg
QTY	6 pcs/carton



OM160

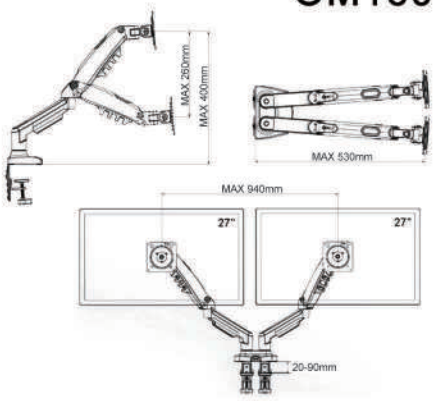

Screen Size	17- 27 inch
Weight Capacity	2-9kg
Tilt	+85°/-30°
Swivel	±90°
VESA	75/100mm
Rotation	360°
Box Dims	422×196×135mm
Weight	5.37kg
Master Carton	435×414×423mm
Weight	32.22kg
QTY	3 pcs/carton

Installation Option



Side Clamp



Grommet Install

Customized Logo Acceptable





X.Transfo





MA600A

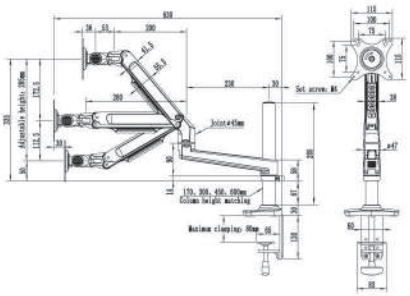

Material	Diecast aluminium
Weight Capacity(Per Screen)	3-11kg
Suggested Screen Size	13-34"
Screen Tilt Range	+90°~-25°
VESA Com	75/100mm
Screen Swivel Range	+90°~-90°
Stretch Distance	860mm
Lifting Life	200,000 Times
Lifting Range	285mm
Screen Rotation	360°
Warranty	10 years
Shipping Weight	3.8Kg



MA800A

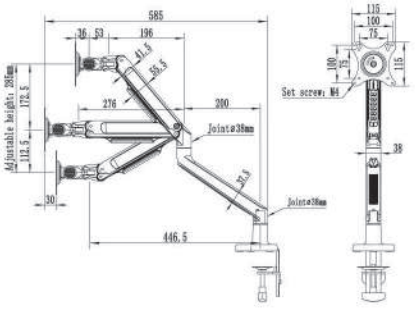

Material	Diecast aluminium
Weight Capacity(Per Screen)	3-11kg
Suggested Screen Size	13-34"
Screen Tilt Range	+90°~-25°
VESA Com	75/100mm
Screen Swivel Range	+90°~-90°
Stretch Distance	860mm
Lifting Life	200,000 Times
Lifting Range	285mm
Screen Rotation	360°
Warranty	10 years
Shipping Weight	3.5Kg

Installation Option



Side Clamp
10-85mm for clamp



Grommet Install
10-60mm for grommet



MA600A



MA600A3



MA800A

Single



MA600A1



MA600B



MA800B

Dual



MA600C

Triple



MA600A2

Multiple

Hi-Crane





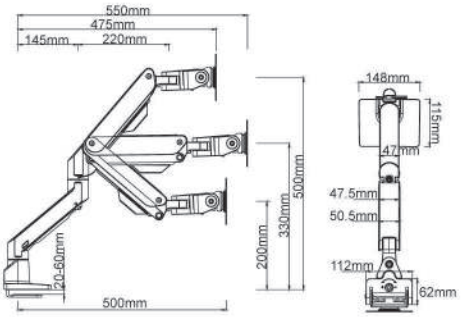

MA900A

Max Screen Size	38-49" Curved
Weight Capacity	10-20kg
Tilt Range	+90° to -5°
Arm Max Extension	585mm
Max Vertical Height	500mm
Clap Range	2-6cm
HD Tilter	Yes
LIFT Mechanism	Gas spring
Quick Release Head	Yes
New Top Mounting	Yes
Cable Management	Yes
180 Degree Lockout	Yes
Lifting Life	10 years



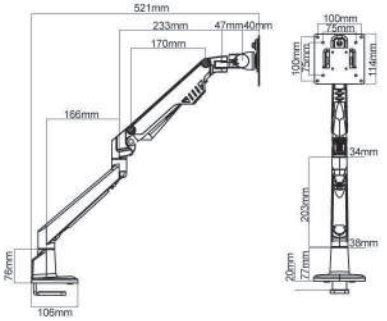

MA700A

Max Screen Size	17-32"
Weight Capacity	2~9kg
Arm Max Extension	545mm
Max Vertical Height	505mm
Tilt Range	+90° to -45°
Clap Range	2-6cm
HD Tilter	Yes
LIFT Mechanism	Gas Spring
Quick Release Head	Yes
C-Clamp	Yes
New Top Mounting	Yes
180 degree lockout	Yes
Finish	BK,WT,SL

Installation Option



Side Clamp



Grommet Install



MA700A



MA900A

Single



MA700B

Dual



MA700A1E3



MA900A1E3



MA700B1E3

With Power Socket

HiRobot


These 10 Hiking Trails Are at Risk
A Nebula Illuminated by Its Miss
Stars



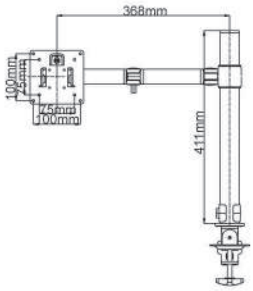

MA200A

Material	Aluminum+steel
Screen Size	13"-27"
Load	8kg every monitor
VESA	75/100mm
Tilt	-90°/+35°
Swivel	180°
Rotation	360°



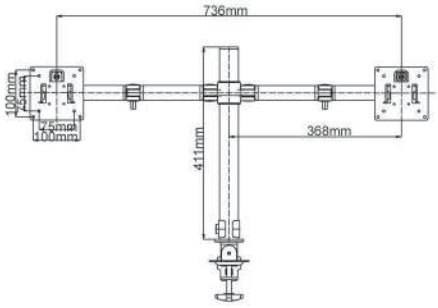

MA200B

Material	Aluminum+steel
Screen Size	13"-27"
Load	8kg every monitor
VESA	75/100mm
Tilt	-90°/+35°
Swivel	180°
Rotation	360°

Installation Option



Side Clamp



Grommet Clamp

SGS

No.: AJHL2201000300FT



MA200A3



MA200A

Single



MA200B3



MA200B



MA200B2



MA200B4



MA200B6



MA200B5

Dual



MA200A1E3



MA200B1E3



MA200B2E3



MA200B4E3



MA200B6E3



MA200B5E3



MA200C1E3

With Power Socket



MA200C

Triple


Base 410


Base 710

Description	Height	Base
Base 410	410mm/16.14"	Drilling Screw
Base 710	710mm/27.95"	Drilling Screw

Column

Single


Arm S


Arm M


Arm L

Description	Width
Arm S	190mm/7.48"
Arm M	321mm/12.64"
Arm L	449mm/17.68"

Dual


Arm S


Arm M


Arm L

Description	Width
Arm S	380mm/14.96"
Arm M	642mm/25.28"
Arm L	898mm/35.35"

Arm


VESA Plate


Cell Phone Plate


Ipad Plate


Laptop Plate

Description	Width	Height
VESA Plate	120mm/4.72"	120mm/4.72"
Cell Phone Plate	116mm/4.57"	125mm/4.92"
Ipad Plate	241mm/9.49"	104.5mm/4.11"
Laptop Plate	320mm/12.6"	242mm/9.53"

Connect Plate

Hi.Truss



MA400A



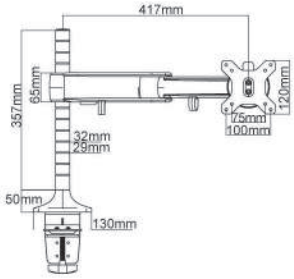

Screen Size	0-32"
Weight Capacity(Per Arm)	8kg
Arm MAX Extension	417mm(16.42")
Arm MAX Height	357mm(14.06")
Cable Management	Yes
VESA Compatible	75/100mm
Material	Aluminum
Tilt	±60°
Swivel	360°
Rotation	360°
Height Adjustable	Manual adjustment
Fatigue test	40000 times
Clamp Range	0-100mm(0-3.9")
Warranty	2 years

MA400C



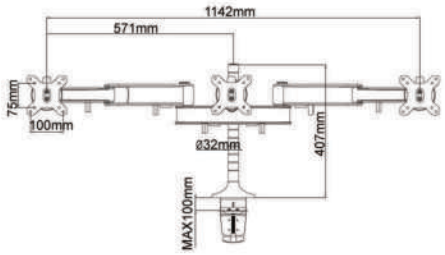

Screen Size	0-32"
Weight Capacity(Per Arm)	8kg
Arm MAX Extension	525mm(20.7")
Arm MAX Height	407mm(16")
Cable Management	Yes
VESA Compatible	75/100mm
Material	Aluminum
Tilt	±60°
Swivel	360°
Rotation	360°
Height Adjustable	Manual adjustment
Fatigue test	40000 times
Clamp Range	0-100mm(0-3.9")
Warranty	2 years

Installation Option



Side Clamp



MA400A



MA400AE3

Single



MA400A1



MA400A2



MA400A2E3



MA400B



MA400BE3

Dual



MA400C



MA400CE3

Triple



MA400D



MA400F

Multiple

Your Innovative Monitor Arm Solution

omni

Jiangsu Omni Industrial Co., Ltd.
ADDRESS: No.9 YinBai Road, Hanjiang Industrial Park, Yangzhou, Jiangsu, China
WEBSITE: www.omnigroup.cn | www.omnidesking.com
EMAIL: marketing@omnidesking.com
TEL: +86-13952796137

LinkedIn Alibaba.com