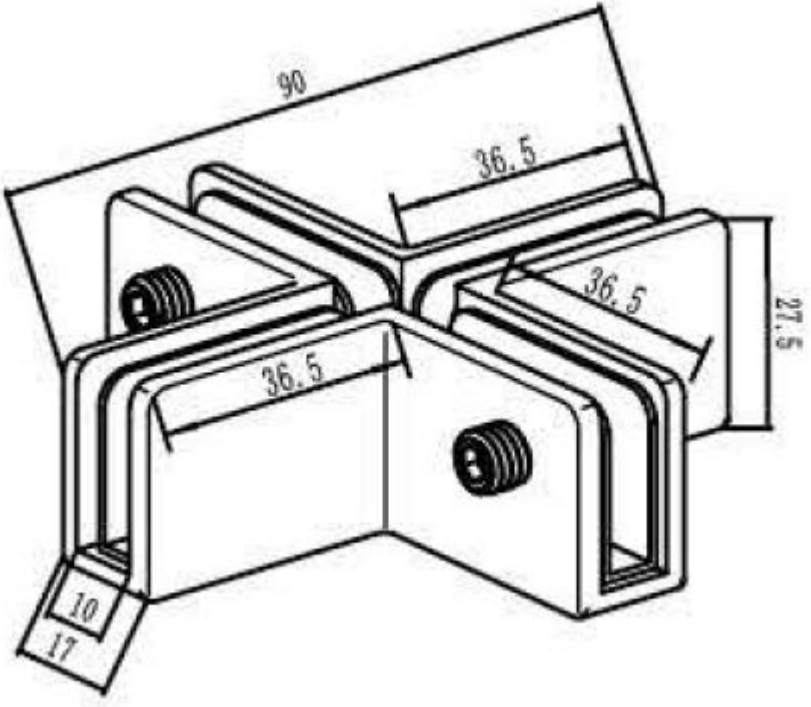
90
36.5
36.5
36.5
27.5
10
17